UNIVERSITY OF CAMBRIDGE INTERNATIONAL EXAMINATIONS
General Certificate of Education
Advanced Subsidiary Level and Advanced Level

CHEMISTRY **9701/06**

Paper 6 Options

May/June 2005

1 hour

Additional Materials: Answer paper
Data Booklet
Graph Paper (1 sheet)

READ THESE INSTRUCTIONS FIRST

Write your name, Centre number and candidate number on the front of any work handed in.
Write in dark blue or black pen.
You may use a pencil for any diagrams, graphs, or rough working.
Do not use staples, paper clips, highlighters, glue or correction fluid.
Write your answers on the separate answer paper provided.

Answer **all** questions on **two** of the Options.
At the end of the examination, fasten all your work securely together.
The number of marks is given in brackets [ ] at the end of each question or part question.
A Data Booklet is provided.
You may use a calculator.

This document consists of **8** printed pages.

© UCLES 2005

BIOCHEMISTRY

Answer **both** questions on the paper provided.

1 The structures of four amino acids may be represented as shown below.

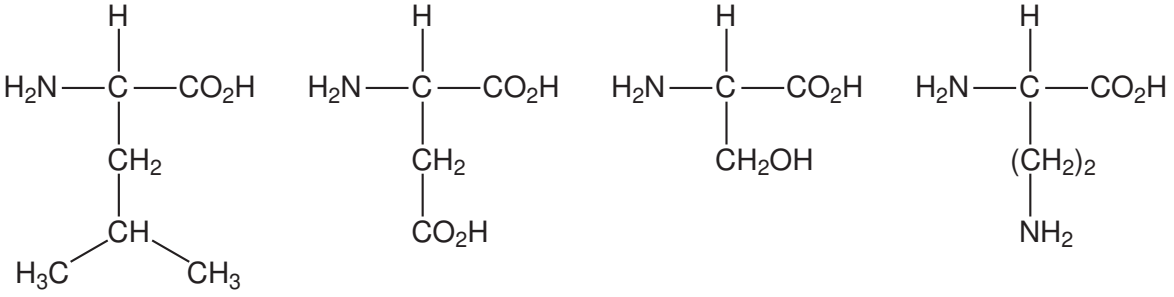

A **B** **C** **D**

(a) **(i)** Which functional groups are involved when a peptide chain is formed from amino acids?

(ii) Draw a diagram to show how **A** and **C** form a dipeptide.

[2]

(b) **(i)** Draw the structure of **B** at pH 12.

(ii) Draw the structure of **D** at pH 2.

[2]

(c) Which side-chains in the examples **A** to **D**, are most likely to be involved in the denaturing of proteins by

(i) changes in pH, and

(ii) addition of heavy metal ions?

Explain your answers, giving equations or structures where possible.

[6]

© UCLES 2005

2 **(a)** The diagram represents a section of the structure of a nucleic acid.

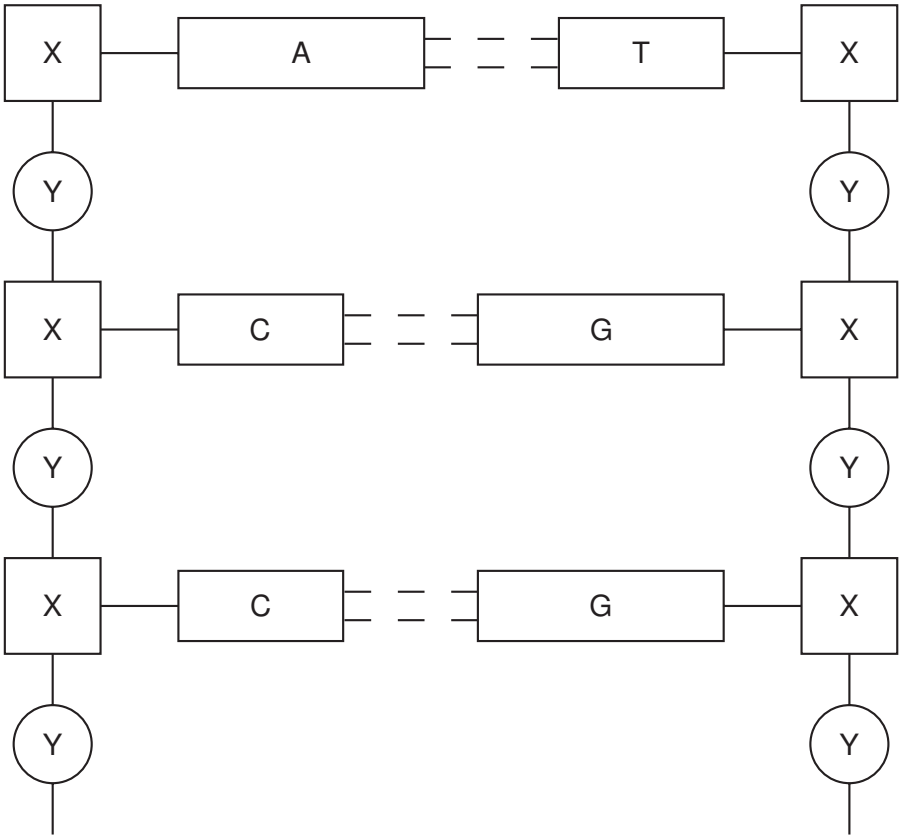

(i) Explain why the nucleic acid is most likely to be DNA.

(ii) Identify the blocks labelled **X** and **Y**.

[4]

(b) Analysis of a sample of DNA showed that 29% of the nitrogenous bases present were adenine, A. Calculate the percentages of each of the other bases in the DNA. [2]

(c) Outline briefly how the code in m-RNA is translated to give the primary structure of the protein. [4]

© UCLES 2005

[Turn over

ENVIRONMENTAL CHEMISTRY

Answer **both** questions on the paper provided.

3 In hot summers there may be a significant increase in the concentration of tropospheric (low-level) ozone. Pollution from car exhausts is considered to be a significant contributor to the problem.

(a) Give **two** examples of the adverse effects of ozone in the lower atmosphere. [2]

(b) Nitrogen monoxide may be involved in the destruction of both tropospheric ozone and stratospheric ozone. Explain, using equations, how nitrogen monoxide is particularly effective in this process. [3]

(c) The concentration of low-level ozone may be increased if hydrocarbons such as unburnt fuel or methane enter the atmosphere. This results from a complex series of gas phase free-radical reactions illustrated by the following equations which involve methane.

$$OH\bullet + CH_4 \longrightarrow H_2O + CH_3\bullet$$
$$CH_3\bullet + O_2 \longrightarrow CH_3O_2\bullet$$
$$CH_3O_2\bullet + NO \longrightarrow CH_3O\bullet + NO_2$$
$$CH_3O\bullet + O_2 \longrightarrow HCHO + HO_2\bullet$$
$$HO_2\bullet + NO \longrightarrow NO_2 + OH\bullet$$

(i) Give an equation to show how OH• free radicals may be formed in the troposphere.

(ii) Use the reaction sequence provided to explain carefully how methane can cause an increase in ozone in the troposphere.

(iii) What other polluting gases could be present as a result of these reactions?

[5]

4 **(a)** Gaseous oxygen maintains ions such as iron(III), sulphate and nitrate in their oxidised state within soils. Use the *Data Booklet* to give the half-equation for the reaction of oxygen which explains this. [1]

(b) In normal soil conditions however the $E^{\ominus}$ of this half-equation is approximately +0.4 V lower than its value under standard conditions.

State **two** reasons for this. [2]

(c) If this lower value is decreased even further the iron(III) tends to become reduced.

(i) Explain **two** circumstances which might cause such a decrease in the redox potential.

(ii) With reference to the appropriate electrode potential, explain the reduction of the iron(III) ions.

[4]

(d) **(i)** Explain the effect of extreme reducing conditions on the sulphate ion and write a half-equation to illustrate your answer.

(ii) What effect would such conditions have on plant growth? Explain your answer.

[3]

© UCLES 2005

PHASE EQUILIBRIA

Answer **both** questions on the paper provided.

5 **(a)** The amounts of oxygen available to mammals and to fish in their respective environments are different. Oxygen (M_r = 32) obeys Henry's Law, and may be considered as comprising 20% by volume of air.

(i) State *Henry's Law*.

(ii) Calculate the **mass** of oxygen in 1 dm^3 of air at 25 °C and 1 atm.

(iii) The solubility of oxygen in water at 25 °C and a partial pressure of 0.2 atm is 0.031 cm^3 per cm^3 of water.

Calculate the **mass** of oxygen dissolved in 1 dm^3 of water.

[3]

(b) Henry's Law does not apply to the distribution of oxygen and of carbon dioxide between the blood of a human and the gases in the atmosphere. Give reasons, with detailed explanations, why this is the case. [4]

(c) Deep water divers rely on breathing pressurised air at about 5 atm. For this question, you may assume the volume of blood in a diver's body to be 5 dm^3.

(i) What **mass** of oxygen from air at a pressure of 5 atm would dissolve in 5 dm^3 of water at 25 °C?

When a diver returns to the surface, there may be problems if bubbles of gas form in the blood vessels, as these restrict the flow of blood through valves and capillaries.

(ii) Explain why these bubbles cannot be oxygen, and suggest which gas causes the problem.

(iii) Explain briefly why carbon dioxide causes no real problem as the diver surfaces.

[3]

6 Bismuth, m.p. 273 °C, and cadmium, m.p. 323 °C, form a eutectic at 140 °C of composition 41% by mass of cadmium.

(a) Use graph paper to construct the bismuth/cadmium system, using a ruler to join the points. Label the four areas of the phase diagram. [3]

(b) A solid sample of the mixture containing 20% by mass of cadmium is heated slowly.

(i) At what temperature will liquid first appear?

(ii) What will be the composition (% cadmium by mass) of this liquid?

[2]

(c) A 200 g of a sample of liquid containing 80% by mass of cadmium is cooled to 217 °C, and that temperature is maintained long enough for equilibrium to be established.

What will be the compositions (% cadmium by mass) of the liquid and solid phases, and the masses of each phase present? [3]

(d) Explain why bronze, an alloy of copper and tin, shows different properties to those of the two metals. [2]

© UCLES 2005

[Turn over

SPECTROSCOPY

Answer **both** questions on the paper provided.

7 **(a)** Describe the role of d orbitals in producing colour in transition metal complexes. You may use the example of water being progressively added to anhydrous copper sulphate in your explanation. [4]

(b) The uv/visible spectrum shown below was obtained from a solution containing $[M(H_2O)_6]^{3+}$, where *M* is a transition metal.

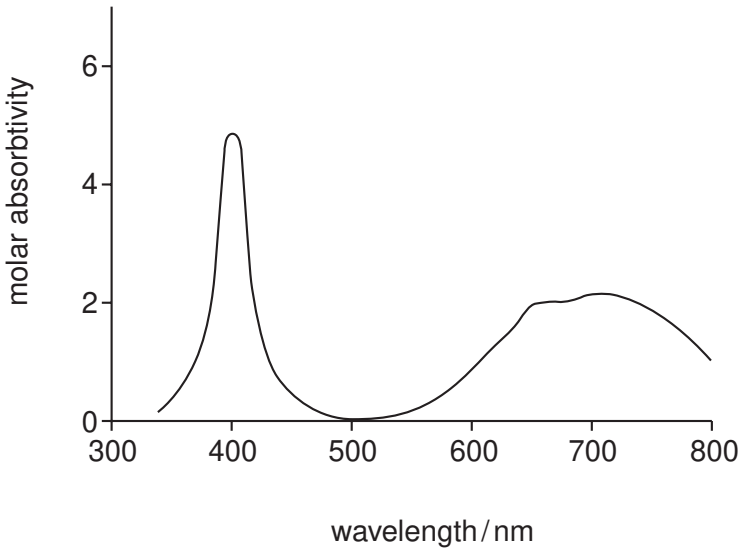

Predict the colour of the solution, explaining your reasoning. [2]

(c) Each of the following molecules absorbs energy in the uv/visible region of the spectrum as a result of electronic transitions.

For each molecule, state the transition(s) responsible.

(i) $CH_3CH_2NH_2$

(ii) $CH_3CH{=}CH_2$

(iii) CH_3CHO

[4]

© UCLES 2005

8 The spectra shown below were each obtained from compound **Y**.

Use evidence from each of them to suggest a structure for the compound. Explain how absorptions shown in each of the spectra lead to your suggested structure.

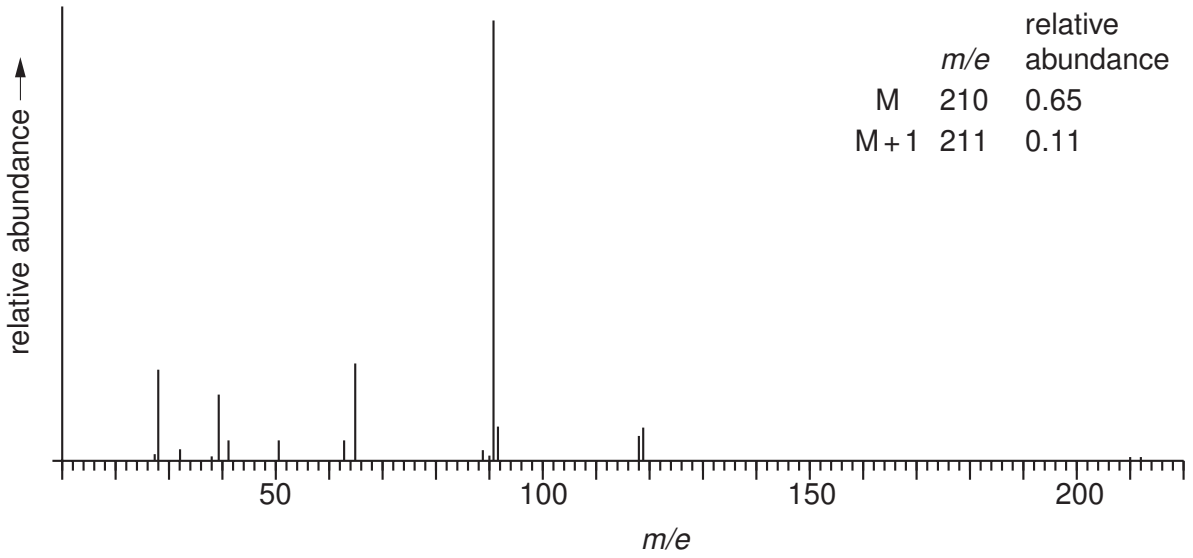

	m/e	relative abundance
M	210	0.65
M+1	211	0.11

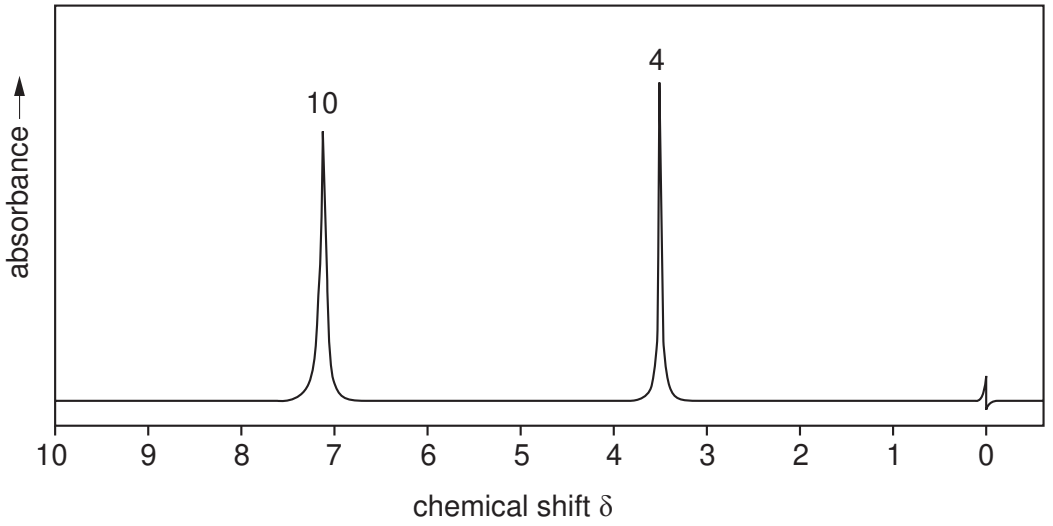

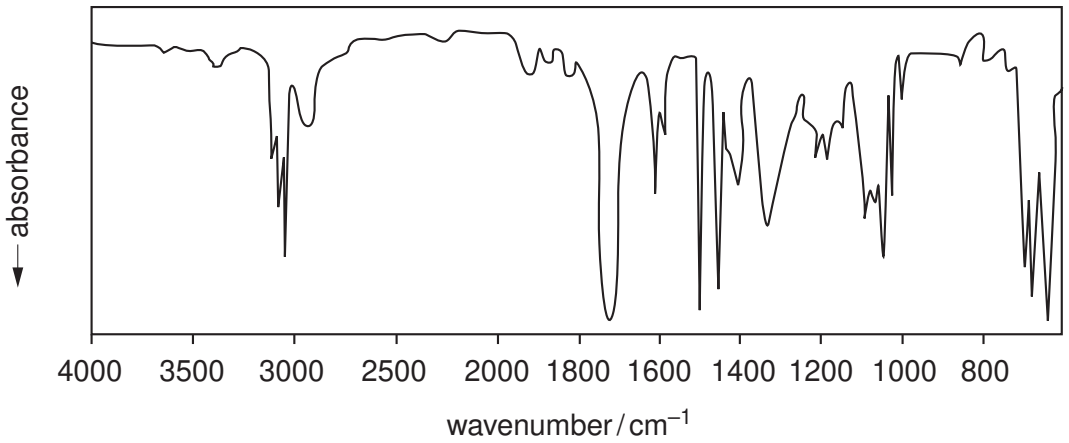

[10]

TRANSITION ELEMENTS

Answer **both** questions on the paper provided.

9 **(a)** Briefly describe the biochemical importance of cobalt. [2]

(b) **(i)** For the electrode reaction $[Co(NH_3)_6]^{3+} + e^- \longrightarrow [Co(NH_3)_6]^{2+}$, $E^{\ominus} = +0.10\,V$

Use this information and the *Data Booklet* to explain why aqueous solutions of Co(II) salts are indefinitely stable to air, but when ammonia is added, oxidation readily occurs.

(ii) Aqueous cobalt ions have very pale colours which can be ignored. Suggest the reaction that might occur, and hence the colour change that would be seen, when a solution containing $Co^{3+}(aq)$ is added to an acidified solution of $Cr^{3+}(aq)$. Write a balanced equation for the reaction.

[5]

(c) State a major use of chromium. [1]

(d) When ammonium dichromate(VI) is heated, an exothermic reaction is initiated which results in the evolution of two neutral gases, and leaves as the only solid residue a grey-green powder, Cr_2O_3.

Suggest the identity of the gases evolved, and construct a balanced equation for the decomposition. [2]

10 **(a)** Major impurities in copper ores are compounds of zinc. Describe in outline how zinc is removed during the electrolytic purification of copper. [4]

(b) Explain the chemistry behind the use of alkaline Cu(II) complexes as a test for aldehydes. [3]

(c) A 0.50 g sample of Palestinian brass dated 1200 BC was dissolved in nitric acid. After evaporating to remove the excess of nitric acid, the resulting nitrates were dissolved in water and an excess of KI(aq) added. After suitable treatment, the precipitated CuI(s) weighed 1.16 g.

(i) Calculate the percentage of copper in the brass.

(ii) What metal was the other major component in the brass?

[3]

Permission to reproduce items where third-party owned material protected by copyright is included has been sought and cleared where possible. Every reasonable effort has been made by the publisher (UCLES) to trace copyright holders, but if any items requiring clearance have unwittingly been included, the publisher will be pleased to make amends at the earliest possible opportunity.

University of Cambridge International Examinations is part of the University of Cambridge Local Examinations Syndicate (UCLES), which is itself a department of the University of Cambridge.

© UCLES 2005